

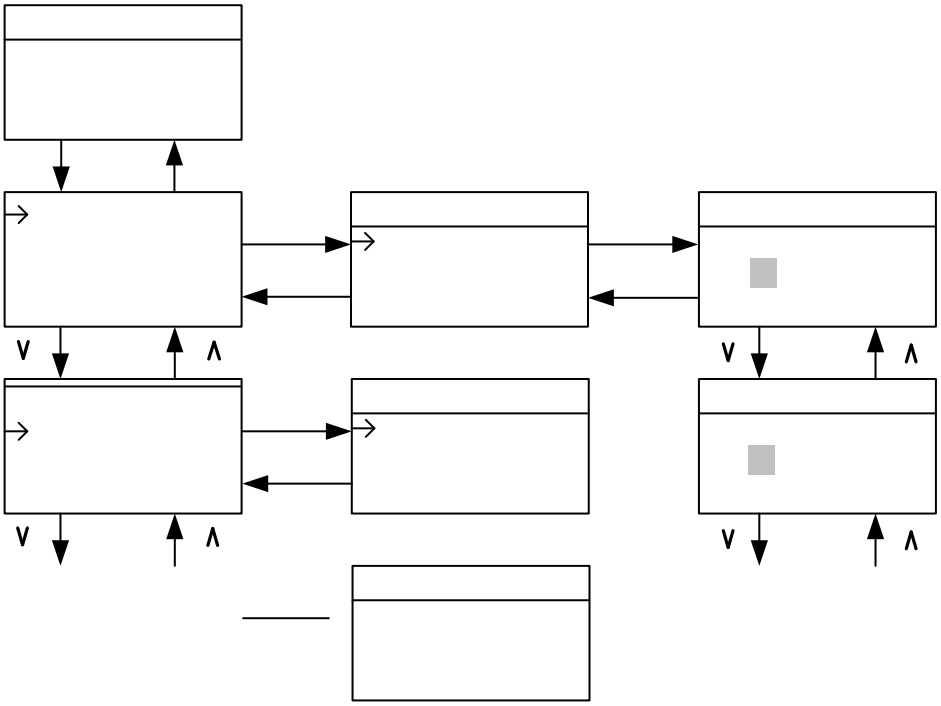

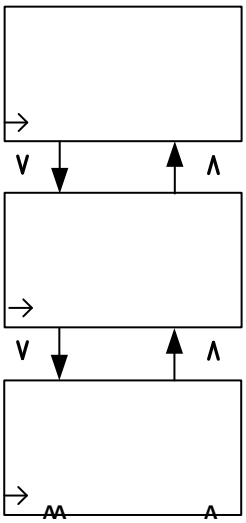

AA A A AA A A





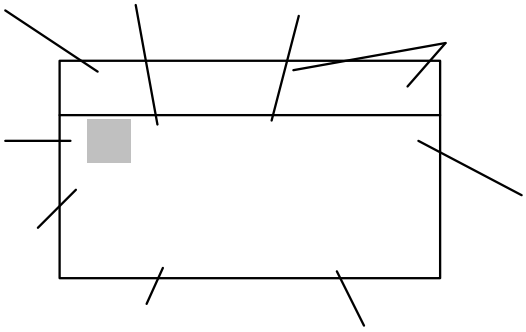

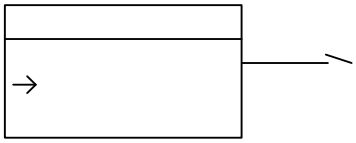

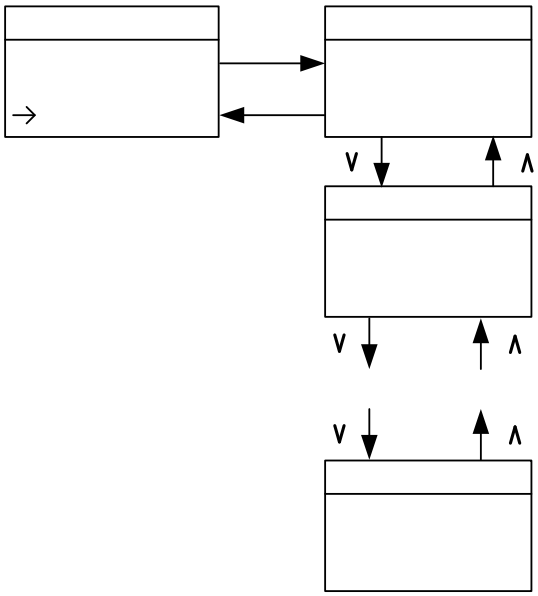

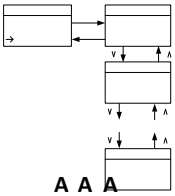

A A A A A A A A

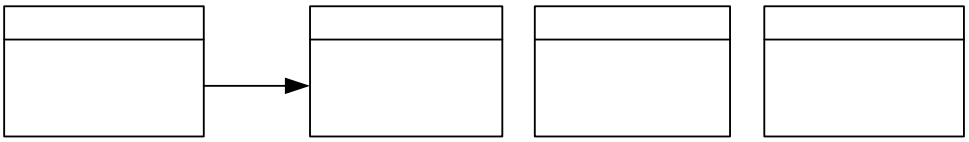

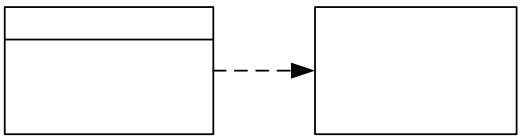



IMPORTANT

